Exam Date & Time: 27-Apr-2023 (09:30 AM - 12:30 PM)

MANIPAL ACADEMY OF HIGHER EDUCATION

FIRST SEMESTER B.TECH. (MAKEUP) EXAMINATIONS - APRIL 2023
SUBJECT: ELE-1071 / ELE -1051 - BASIC ELECTRICAL TECHNOLOGY
(REGULARS - LATE ADMISSION BATCH)

Basic Electrical Technology [ELE-1071]

Marks: 50 **Duration: 180 mins.**

A

Answer all the questions.

1A) Determine the value of resistor **'R'** in the circuit shown with a supply current of **0.8 A**. (3)

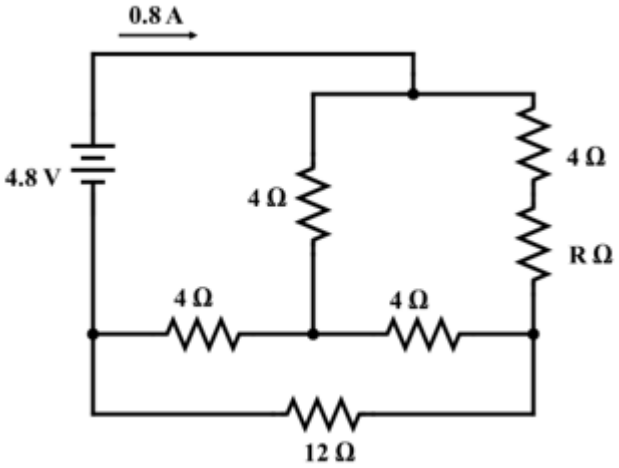

1B) Find the voltage across and power consumed by the **2 Ω** resistor in the circuit. (3)

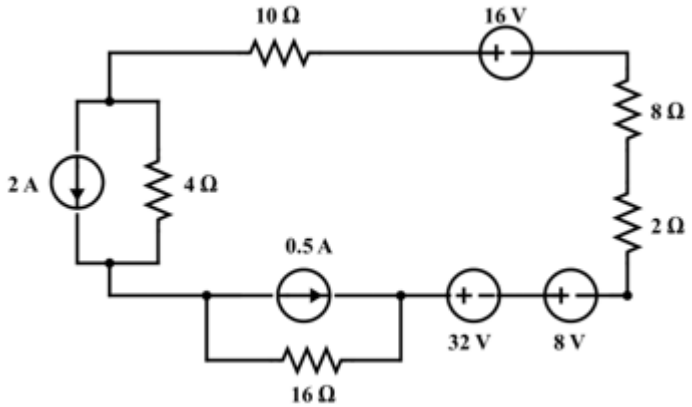

1C) In the network shown, find the power supplied by the **2 A** source using node voltage analysis. (4)

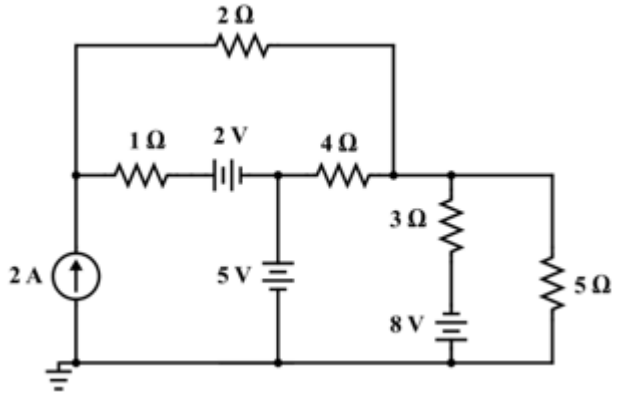

2A) For the network shown, the switch is closed on to position **1** at **t = 0** and then moved to position **2** at **t = 1.4 ms**. Determine the current in the inductor when **t = 2.5 ms.**

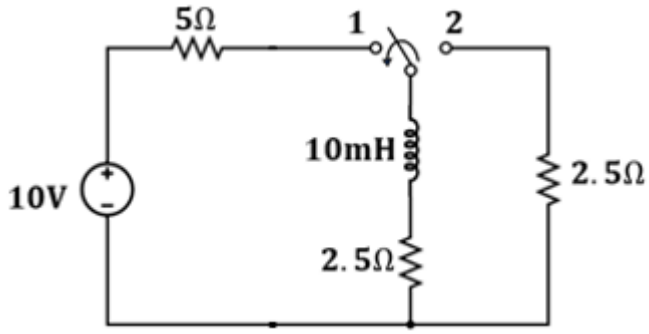

(3)

2B) For the magnetic circuit shown, the reluctance of the central limb (AB) is **10×10^5 AT/Wb** and the reluctance of the outer limbs (ACB and ADB) are same and equal to **15×10^5 AT/Wb**. The number of turns in the coil is **1000**. Central limb AB has flux density of **1.25 Tesla** and a mean length of **10 cm**. Assuming uniform area of cross section, determine

i) the current to be flowing in the coil to produce **0.5 mWb** in limb ADB.

ii) The relative permeability of the magnetic material.

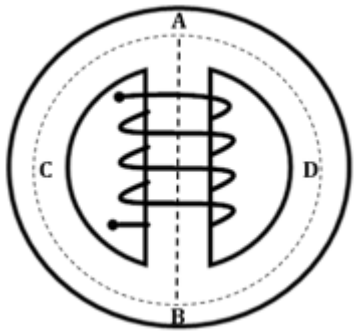

(4)

2C) Determine the equivalent inductance seen at terminals **A** & **B** in the given network. Also compute the coupling coefficients **k_{12}, k_{23} and k_{13}.**

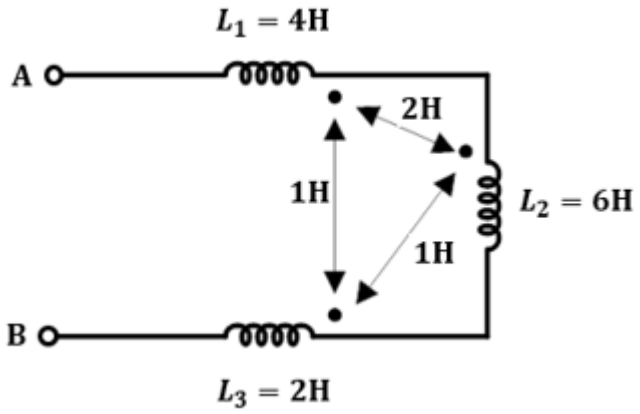

(3)

3A) Determine the **RMS** value of the following signal.

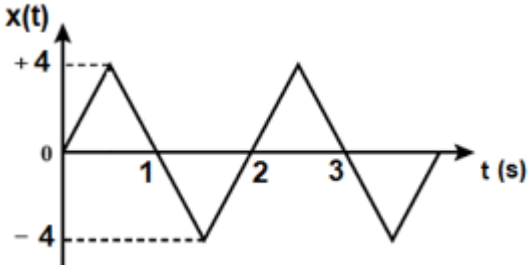

(3)

3B) An **8 Ω** resistor is connected in series with a coil of resistance $\mathbf{R_L}$ and inductance **L** and the whole combination is supplied with a **120 V, 50 Hz, 1-phase** AC source. If the voltage across **8 Ω** resistor is **32 V** and **104 V** across the coil, determine the impedance of the coil. (3)

3C) For the circuit shown, evaluate the current through and voltage across each element.

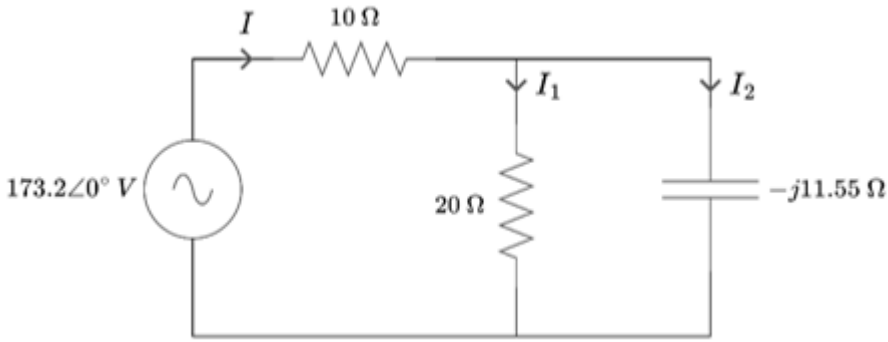

(4)

4A) A coil of resistance **50 Ω** and inductance **0.318 H** is connected in parallel with a circuit comprising a **75 Ω** resistor in series with a **159 μF** capacitor. The resulting circuit is connected to a **230 V**, **50 Hz**, AC supply. Calculate: (a) the supply current (b) the circuit impedance, resistance, and reactance. (4)

4B) A **3-phase**, **400 V**, **Y**-connected, **ABC** system supplies an unbalanced **Y**-connected load of impedances $Z_A = 25\ \angle 0°$, $Z_B = 11\angle -20°$ *and* $Z_C = 15\angle 10°$. Assuming $\mathbf{V_{AB}}$ as reference voltage, determine line currents, total power consumed and current in the neutral of the system. (6)

5A) Three similar choke coils are connected in star to a three-phase supply. If the line current is 15 A, the total power consumed is 11 kW and the volt-ampere input is 15 kVA, find the line and phase voltages, the VAR input and the reactance and resistance of each coil. (4)

5B) Sketch a one-line diagram of a power system network architecture indicating voltage levels at various stages. (3)

5C) How are transformers classified? Elaborate. (3)

-----End-----